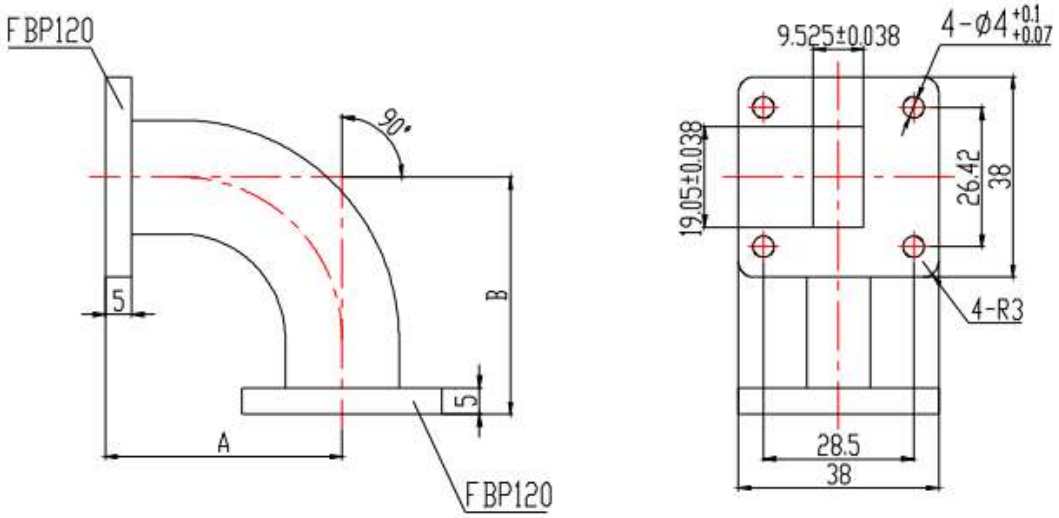

WR75 WAVEGUIDE H-BEND

Mechanical Specification	
Waveguide Type	WR75
Material	Copper
Inside Finish	Silver Plating
Outside Finish	Anticorrosion Black Paint
Flange Type	FBP120 (Cover)
Dimensions	A=45 mm, B=45 mm

Electrical Specification	
Frequency Range	9.84-15 GHz
VSWR (Max)	1.15

Signity RF Solutions offers a standard product line of *E Bend and H Bend covering waveguide* sizes WR10 thru WR430. Additional size and Configuration can be custom made as per customer's specific requirements.